Unit: Redox and Electrochemistry

Topic: Introduction to Redox Reactions

A. Review of the rules for assigning oxidation numbers

1. The oxidation number of elements in their elemental state is zero.
2. The oxidation number of monatomic ions is the charge on the ion.
3. The oxidation number of Group 1 elements in compounds is +1.
4. The oxidation number of Group 2 elements in compounds is +2.
5. The oxidation number of Hydrogen in compounds is usually +1, except in metal hydrides when it is -1.
6. The oxidation number of oxygen in compounds is -2 except in peroxides when it is -1 or with flourine it is +2.
7. The sum of the oxidation numbers of a compound is zero.
8. The sum of the oxidation numbers of a polyatomic ion equals the charge on the ion.

B.

Oxidation	Reduction
1.	

C. Redox Reaction:

Demo 1: Equation:

Oxidation:

Reduction:

Oxidizing Agent: Reducing Agent:

Demo 2: Equation:

Oxidation:

Reduction:

Oxidizing Agent: Reducing Agent:

Demo 3: Equation:

Oxidation:

Reduction:

Oxidizing Agent: Reducing Agent:

SELF QUIZ

Directions:

1. Assign oxidation numbers to all elements.
2. Decide which substance (if any) is oxidized and which is reduced.
3. Is the reaction a redox reaction.

A. $HCl + NaOH \rightarrow NaCl + H_2O$

B. $CaCO_3 \rightarrow CaO + CO_2$

C. $SnCl_4 + Fe \rightarrow SnCl_2 + FeCl_2$

D. $Zn + O_2 \rightarrow 2\ ZnO$

E. $P_4O_6 + 6\ H_2O \rightarrow 4\ H_3PO_4$

Conclusions: The following equations are redox reactions because

Old table

N

STANDARD ELECTRODE POTENTIALS	
Ionic Concentrations 1 M Water At 298 K, 1 atm	
Half-Reaction	E^0 (volts)
$F_2(g) + 2e^- \rightarrow 2F^-$	+2.87
$8H^+ + MnO_4^- + 5e^- \rightarrow Mn^{2+} + 4H_2O$	+1.51
$Au^{3+} + 3e^- \rightarrow Au(s)$	+1.50
$Cl_2(g) + 2e^- \rightarrow 2Cl^-$	+1.36
$14H^+ + Cr_2O_7^{2-} + 6e^- \rightarrow 2Cr^{3+} + 7H_2O$	+1.23
$4H^+ + O_2(g) + 4e^- \rightarrow 2H_2O$	+1.23
$4H^+ + MnO_2(s) + 2e^- \rightarrow Mn^{2+} + 2H_2O$	+1.22
$Br_2(\ell) + 2e^- \rightarrow 2Br^-$	+1.09
$Hg^{2+} + 2e^- \rightarrow Hg(\ell)$	+0.85
$Ag^+ + e^- \rightarrow Ag(s)$	+0.80
$Hg_2^{2+} + 2e^- \rightarrow 2Hg(\ell)$	+0.80
$Fe^{3+} + e^- \rightarrow Fe^{2+}$	+0.77
$I_2(s) + 2e^- \rightarrow 2I^-$	+0.54
$Cu^+ + e^- \rightarrow Cu(s)$	+0.52
$Cu^{2+} + 2e^- \rightarrow Cu(s)$	+0.34
$4H^+ + SO_4^{2-} + 2e^- \rightarrow SO_2(aq) + 2H_2O$	+0.17
$Sn^{4+} + 2e^- \rightarrow Sn^{2+}$	+0.15
$2H^+ + 2e^- \rightarrow H_2(g)$	0.00
$Pb^{2+} + 2e^- \rightarrow Pb(s)$	-0.13
$Sn^{2+} + 2e^- \rightarrow Sn(s)$	-0.14
$Ni^{2+} + 2e^- \rightarrow Ni(s)$	-0.26
$Co^{2+} + 2e^- \rightarrow Co(s)$	-0.28
$Fe^{2+} + 2e^- \rightarrow Fe(s)$	-0.45
$Cr^{3+} + 3e^- \rightarrow Cr(s)$	-0.74
$Zn^{2+} + 2e^- \rightarrow Zn(s)$	-0.76
$2H_2O + 2e^- \rightarrow 2OH^- + H_2(g)$	-0.83
$Mn^{2+} + 2e^- \rightarrow Mn(s)$	-1.19
$Al^{3+} + 3e^- \rightarrow Al(s)$	-1.66
$Mg^{2+} + 2e^- \rightarrow Mg(s)$	-2.37
$Na^+ + e^- \rightarrow Na(s)$	-2.71
$Ca^{2+} + 2e^- \rightarrow Ca(s)$	-2.87
$Sr^{2+} + 2e^- \rightarrow Sr(s)$	-2.89
$Ba^{2+} + 2e^- \rightarrow Ba(s)$	-2.91
$Cs^+ + e^- \rightarrow Cs(s)$	-2.92
$K^+ + e^- \rightarrow K(s)$	-2.93
$Rb^+ + e^- \rightarrow Rb(s)$	-2.98
$Li^+ + e^- \rightarrow Li(s)$	-3.04

Table J
Activity Series**

Most	Metals	Nonmetals	Most
	Li	F_2	
	Rb	Cl_2	
	K	Br_2	
	Cs	I_2	
	Ba		
	Sr		
	Ca		
	Na		
	Mg		
	Al		
	Ti		
	Mn		
	Zn		
	Cr		
	Fe		
	Co		
	Ni		
	Sn		
	Pb		
	**H_2		
	Cu		
	Ag		
	Au		
Least			Least

**Activity Series based on hydrogen standard

Name _____ Date _____ Class _____

CHAPTER 21 REVIEW ACTIVITY

Text Reference: Section 21-3

Oxidation and Reduction

Choose words from the list to fill in the blanks in the paragraphs.

Word List

charge
electron
electronegativity
oxidation
oxidation number
oxidation-reduction
oxidizing agent
redox
reducing agent
reduction

The __(1)__ that an atom is assumed to have in a particular molecule or ion is called its __(2)__. In a covalent compound, this quantity is more negative for the element that has the higher __(3)__.

In its older meaning, the term __(4)__ referred to chemical combination with oxygen. In its more modern sense, this term refers to a process that involves the loss of, or decreased hold on, a(n) __(5)__. The opposite of this process is called a(n) __(7)__ reaction, or __(8)__ reaction, for short. In this process, the substance whose oxidation number decreases is called the __(9)__. The substance whose oxidation number increases is called the __(10)__.

1. _____
2. _____
3. _____
4. _____
5. _____
6. _____
7. _____
8. _____
9. _____
10. _____

ASSIGNING OXIDATION NUMBERS

Name _____

Assign oxidation numbers to all of the elements in each of the compounds or ions below.

1. HCl	11. H_2SO_3
2. KNO_3	12. H_2SO_4
3. OH^-	13. BaO_2
4. Mg_3N_2	14. $KMnO_4$
5. $KClO_3$	15. LiH
6. $Al(NO_3)_3$	16. MnO_2
7. S_8	17. OF_2
8. H_2O_2	18. SO_3
9. PbO_2	19. NH_3
10. $NaHSO_4$	20. Na

REDOX REACTIONS

Name _____

For the equations below, identify the substance oxidized, the substance reduced, the oxidizing agent, the reducing agent, and write the oxidation and reduction half reactions.

Example:

oxidized reduced

$$Mg + Br_2 \rightarrow MgBr_2$$

reducing agent — oxidizing agent

oxidation half reaction: $Mg^{\circ} \rightarrow Mg^{+2} + 2e^-$

reduction half reaction: $2e^- + Br_2^{\circ} \rightarrow 2Br^-$

1. $2H_2 + O_2 \rightarrow 2H_2O$

2. $Fe + Zn^{2+} \rightarrow Fe^{2+} + Zn$

3. $2Al + 3Fe^{+2} \rightarrow 2Al^{+3} + 3Fe$

4. $Cu + 2AgNO_3 \rightarrow Cu(NO_3)_2 + 2Ag$

BALANCING REDOX EQUATIONS

Name _____

Balance the equations below using the half-reaction method.

1. $Sn^{\circ} + Ag^{+} \rightarrow Sn^{+2} + Ag^{\circ}$

2. $Cr^{\circ} + Pb^{2+} \rightarrow Cr^{+3} + Pb^{\circ}$

3. $KClO_3 \rightarrow KCl + O_2$

4. $NH_3 + O_2 \rightarrow NO + H_2O$

5. $PbS + H_2O_2 \rightarrow PbSO_4 + H_2O$

6. $H_2S + HNO_3 \rightarrow S + NO + H_2O$

7. $MnO_2 + H_2C_2O_4 + H_2SO_4 \rightarrow MnSO_4 + CO_2 + H_2O$

8. $H_2S + H_2SO_3 \rightarrow S + H_2O$

9. $KIO_3 + H_2SO_3 \rightarrow KI + H_2SO_4$

10. $K_2Cr_2O_7 + HCl \rightarrow KCl + CrCl_3 + Cl_2 + H_2O$

Electrochemical Cells

A. Voltaic (Galvanic Cells)

"In principle, the energy released in any spontaneous redox reaction can be directly harnessed to perform electrical work. This task is accomplished through a voltaic (or galvanic) cell, which is merely a device in which electron transfer is forced to take place through an external pathway rather than directly between reactants.

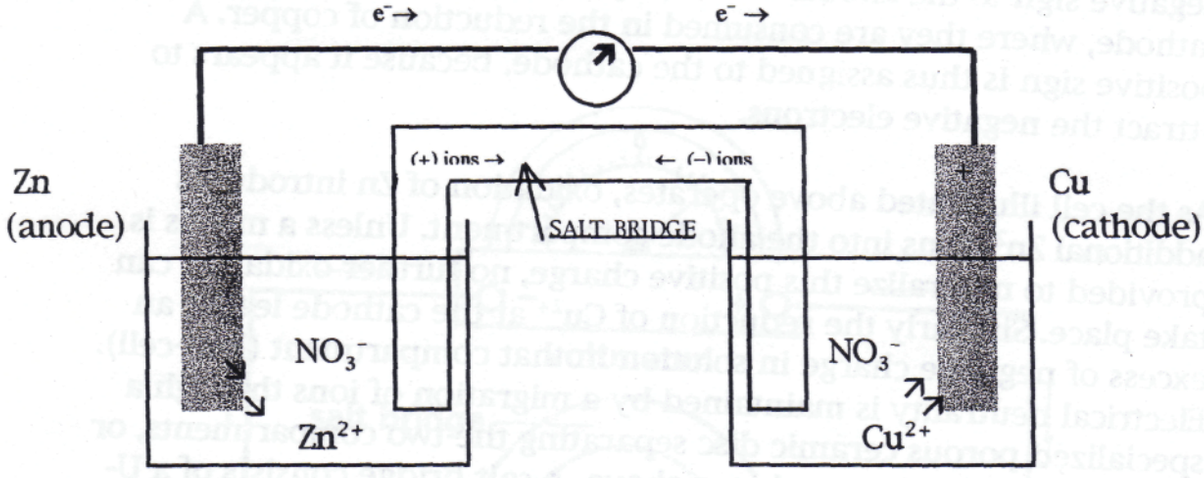

The two solid metals that are connected by the external circuit are called electrodes. By definition, the electrode at which oxidation occurs is called the anode; the electrode at which reduction occurs is called the cathode. It is helpful to think of the voltaic cell as two "half-cells," one corresponding to the oxidation half-reaction and one corresponding to the reduction half-reaction. In the above illustration, Zn is oxidized and Cu^{+2} is reduced:

Anode (oxidation half-reaction): $Zn_{(s)} \rightarrow Zn^{+2}{}_{(aq)} + 2e^-$

Cathode(reduction half-reaction): $Cu^{2+}{}_{(aq)} + 2e^- \rightarrow Cu_{(s)}$

Electrons become available as zinc metal is oxidized at the anode. They flow through the external circuit to the cathode, where they are consumed as $Cu^{2+}{}_{(aq)}$ is reduced. Because $Zn_{(s)}$ is oxidized in the cell, the zinc electrode loses mass, and the concentration of the Zn^{2+} solution increases as the cell operates. Similarly, the Cu electrode gains mass, and the Cu^{2+} solution becomes less concentrated as Cu^{2+} is reduced to $Cu_{(s)}$.

We must ~~be~~ careful about the signs we attach to the electrodes in a voltaic cell. Electrons are released at the anode as the Zinc is oxidized. Electrons are thus flowing out of the anode and into the external circuit. Because the electrons are negatively charged, we assign a negative sign to the anode. Conversely, electrons flow into the cathode, where they are consumed in the reduction of copper. A positive sign is thus assigned to the cathode, because it appears to attract the negative electrons.

As the cell illustrated above operates, oxidation of Zn introduces additional Zn^{2+} ions into the anode compartment. Unless a means is provided to neutralize this positive charge, no further oxidation can take place. Similarly the reduction of Cu^{2+} at the cathode leaves an excess of negative charge in solution in that compartment (half-cell). Electrical neutrality is maintained by a migration of ions through a specialized porous ceramic disc separating the two compartments, or through a salt bridge, as shown above. A salt bridge consists of a U-shaped tube that contains an electrolyte solution, such as $NaNO_{3(aq)}$, whose ions will not react with other ions in the cell or with the electrodes. The ends of the U-tube may be loosely plugged with glass wool, or the electrolyte may be incorporated into a gel so that the electrolyte does not run out when the U-tube is inverted. As oxidation and reduction proceed at the electrodes, ions from the salt bridge migrate to neutralize charge in the anode and cathode compartments. Anions migrate toward the anode, and cations migrate toward the cathode. In fact, no measurable electron flow will occur through the external circuit unless a means is provided for ions to migrate through the solution from one electrode compartment to another, thereby completing the circuit."

The Daniell Cell

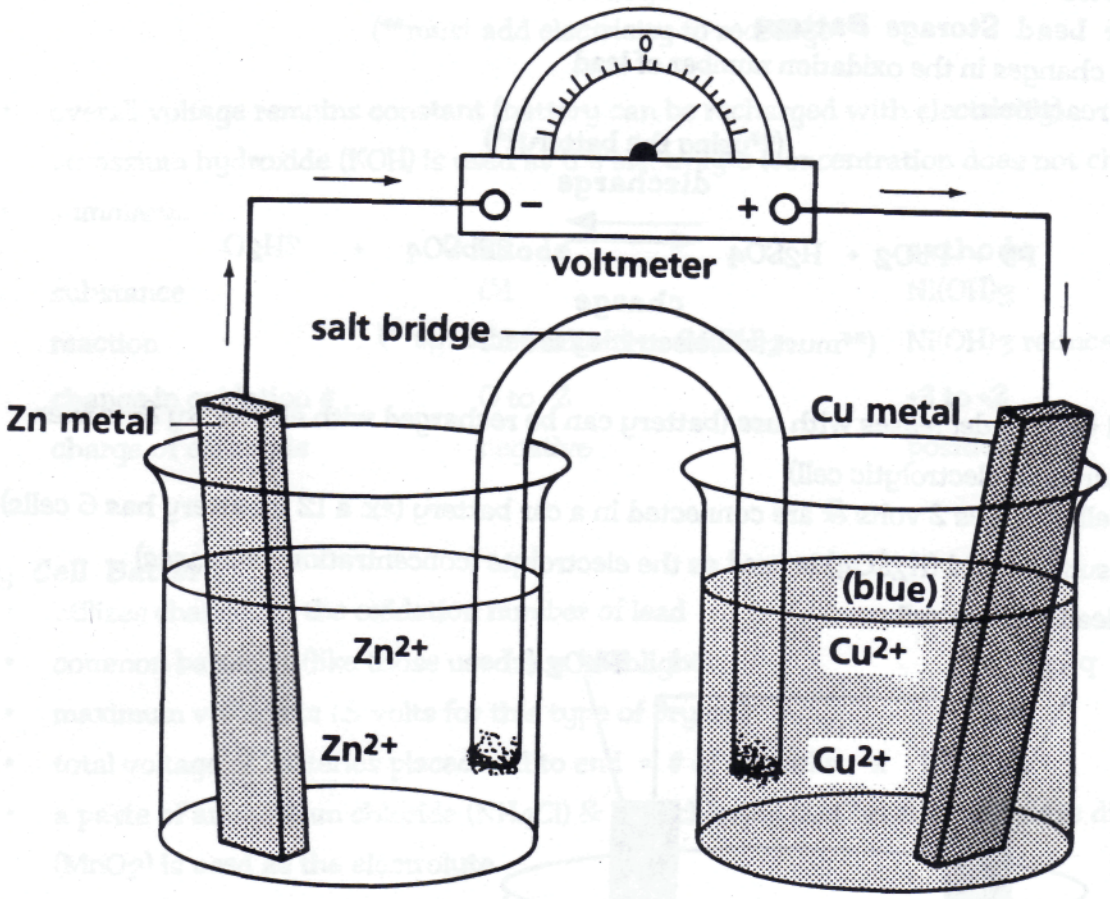

BATTERIES

Batteries are chemical cells* in which the spontaneous redox reaction is used to generate electrical energy by harnessing the flow of electrons. The movement of electrons through a wire is an electrical current. In a battery, chemical energy is changed to electrical energy.

(*note-electrochemical cells, chemical cells & voltaic cells are all the same thing).

Types of batteries

Lead-Acid or Lead Storage Battery

- utilizes changes in the oxidation number of lead
- overall reaction...

(**using the battery**)

discharge

$$Pb + PbO_2 + H_2SO_4 \rightleftharpoons 2PbSO_4 + 2H_2O$$

charge

(**must add electricity to recharge**)

- overall voltage decreases with use (battery can be recharged with electricity & is then considered an electrolytic cell)
- each cell provides 2 volts & are connected in a car battery (ex. a 12 v battery has 6 cells)
- dilute sulfuric acid (H_2SO_4) is used as the electrolyte (concentration decreases)
- basic lead storage cell

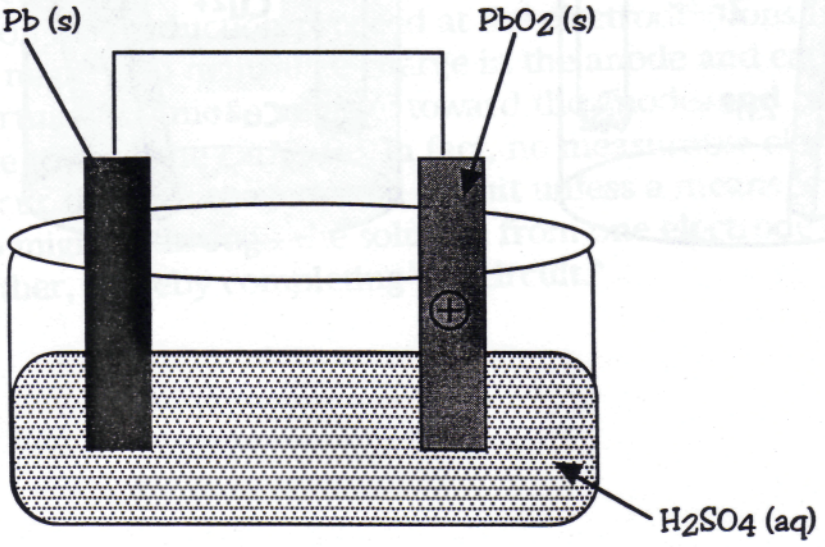

- summary...

	anode	cathode
substance	Pb	PbO_2
reaction	Pb oxidized to $PbSO_4$	PbO_2 reduced to $PbSO_4$
change in oxidation # of Pb	0 to +2	+4 to +2
charge of electrode	negative	positive

Nickel-Cadmium Cell or Rechargeable Battery

- utilizes changes in the oxidation number of nickel & cadmium
- overall reaction...

(**using the battery**)

$$2Ni(OH)_3 + Cd \underset{\text{charge}}{\overset{\text{discharge}}{\rightleftharpoons}} 2Ni(OH)_2 + Cd(OH)_2$$

(**must add electricity to recharge**)

- overall voltage remains constant (battery can be recharged with electricity)
- potassium hydroxide (KOH) is used as the electrolyte (concentration does not change)
- summary...

	anode	cathode
substance	Cd	$Ni(OH)_3$
reaction	Cd oxidized to $Cd(OH)_2$	$Ni(OH)_3$ reduced to $Ni(OH)_2$
change in oxidation #	0 to +2	+3 to +2
charge of electrode	negative	positive

Dry Cell Battery

- utilizes changes in the oxidation number of lead
- common batteries (like those used in a flashlight)
- maximum voltage is 1.5 volts for this type of dry cell
- total voltage of batteries placed end to end = # of dry cells x 1.5 v
- a paste of ammonium chloride (NH_4Cl) & zinc chloride ($ZnCl_2$) & manganese dioxide (MnO_2) is used as the electrolyte
- basic dry cell

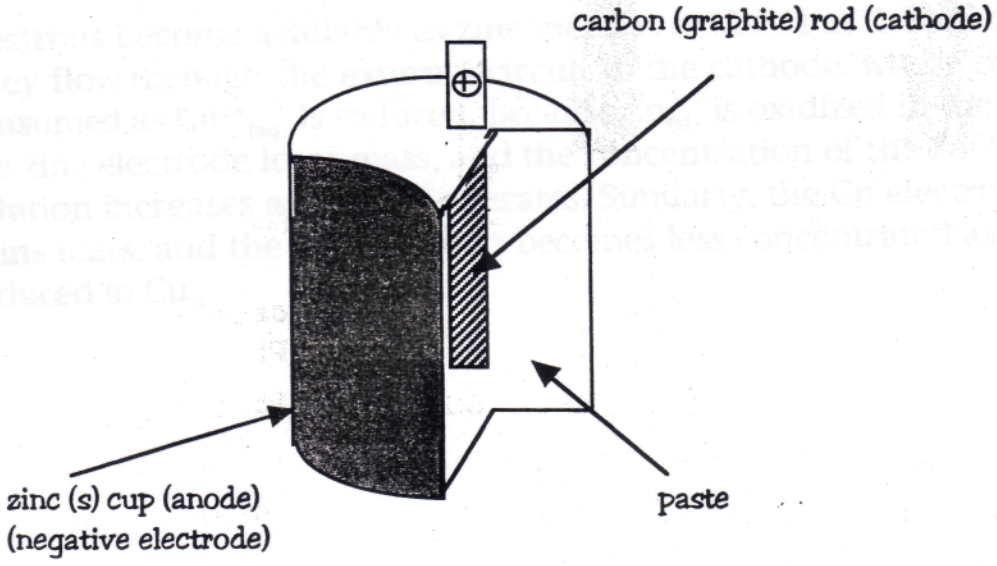

- summary...

	anode	cathode
substance	Zn	C
reaction	Pb oxidized to $PbSO_4$	PbO_2 reduced to $PbSO_4$
change in oxidation	Zn^0 to Zn^{2+}	Mn^{4+} to Mn^{2+}
charge	negative	positive

- alkaline cells are another type of dry cell uses Zn & MnO2 but the electrolyte is KOH & not NH4Cl. This includes batteries that are used in watches cameras & calculators

Name _____ Date _____ Class _____

REVIEW ACTIVITY

Text Reference: Section 22-13

Galvanic Cells

Choose words from the list to fill in the blanks in the paragraphs.

Word List

anode
cathode
Daniell cell
E^0
electrochemical cell
galvanic cell
oxidation
reduction
salt bridge
standard conditions
standard electrode potential
standard hydrogen half-cell
voltage
zinc

A measure of the difference in electrical potential energy is called __(1)__. This quantity can be produced by means of a device called a(n) __(2)__ or __(3)__. Such a device is called a __(4)__ if it uses __(5)__ and copper in solutions of their ions.

In such a cell, the negative electrode, at which __(6)__ takes place, is called the __(7)__. The positive electrode, at which __(8)__ takes place, is called the __(9)__. A U-tube used to allow the passage of ions between solutions containing these electrodes is called a(n) __(10)__.

When a cell in which the half-reaction

$$2H^+(aq) + 2e^- \rightleftharpoons H_2(g)$$

takes place is used under __(11)__ (25°C and 101.3 kPa, $[H^+] = 1\ M$) the cell is called a(n) __(12)__. The voltage obtained when a given half-cell is run under the same conditions in combination with this cell is called __(13)__. Its symbol is __(14)__.

1. _____
2. _____
3. _____
4. _____
5. _____
6. _____
7. _____
8. _____
9. _____
10. _____
11. _____
12. _____
13. _____
14. _____

Name _____ Date _____ Class _____

REVIEW ACTIVITY

Text Reference: Section 22-13

Labelling a Galvanic Cell

The diagram below represents a Daniell galvanic cell involving zinc and copper.

Match each numbered item in the diagram with the letter of the correct label from the list below. Write your answers in the space provided.

A. Zn^{2+} solution
B. salt bridge
C. cathode
D. zinc cation
E. anode
F. U-tube
G. copper cation
H. Cu^{2+} solution

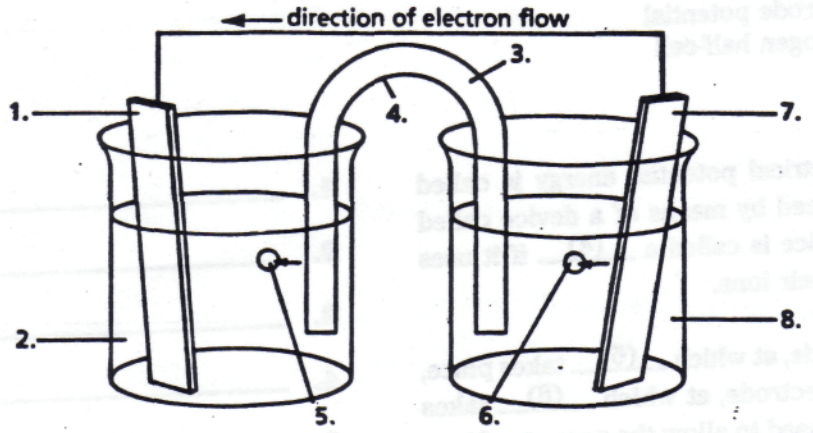

1. _____
2. _____
3. _____
4. _____
5. _____
6. _____
7. _____
8. _____

9. a. Write the equation for the half-reaction that occurs at the cathode. 9. a. _____

b. Is this an example of oxidation or of reduction? b. _____

10. a. Write the equation for the half-reaction that occurs at the anode. 10. a. _____

b. Is this an example of oxidation or of reduction? b. _____

11. Write the overall ionic equation. 11. _____

12. Write the overall molecular equation. 12. _____

E ELECTROCHEMICAL CELL

Name _____

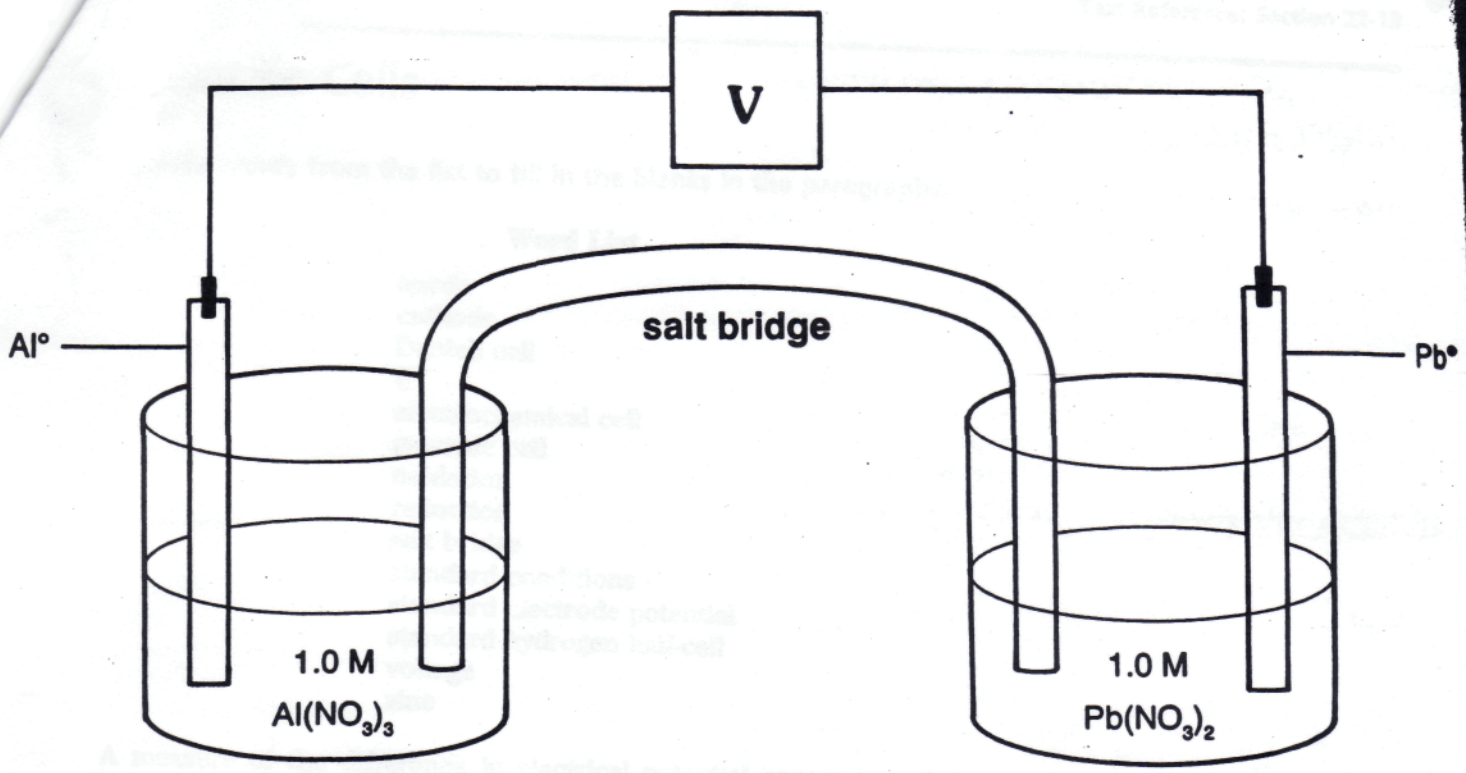

Answer the questions below referring to the above diagram and a Table of Standard Electrode Potentials.

1. Which is more easily oxidized, metal, aluminum or lead? _____
2. What is the balanced equation showing the spontaneous reaction that occurs?

   _____
3. What is the maximum voltage that the above cell can produce? _____
4. What is the direction of electron flow in the wire? _____
5. What is the direction of positive ion flow in the salt bridge? _____
6. Which electrode is decreasing in size? _____
7. Which electrode is increasing in size? _____
8. What is happening to the concentration of aluminum ions? _____
9. What is happening to the concentration of lead ions? _____
10. What is the voltage in this cell when the reaction reaches equilibrium? _____
11. Which is the anode? _____
12. Which is the cathode? _____
13. What is the positive electrode? _____
14. What is the negative electrode? _____

B. Electrolytic Cell

"Spontaneous oxidation-reduction reactions are used as the basis for voltaic cells, electrochemical devices that generate electricity. Conversely, it is possible to use electrical energy to cause nonspontaneous oxidation-reduction reactions to occur. For example, electricity can be used to decompose molten sodium chloride into its component elements:

$$2NaCl_{(l)} \rightarrow 2Na_{(l)} + Cl_{2(g)}$$

Such processes, which are driven by an outside source of electrical energy, are called electrolysis reactions and take place in electrolytic cells.

An electrolytic cell consists of two electrodes in a molten salt or aqueous solution. The cell is driven by a battery or some other source of direct electrical current. The battery acts as an <u>electron pump</u>, pushing electrons into one electrode and pulling them from the other. Withdrawing electrons from an electrode gives it a positive charge, and adding electrons to an electrode makes it negative. In the electrolysis of molten NaCl, illustrated below, Na^+ ions pick up electrons at the negative electrode and are thereby reduced. As the Na^+ ions in the vicinity of this electrode are depleted, additional Na^+ ions migrate in. In a similar fashion, there is a net movement of Cl^- ions to the positive electrode, where they give up electrons and are thereby oxidized. Just as in voltaic cells, the electrode at which reduction occurs is called the cathode, and the electrode at which oxidation occurs is called the anode.

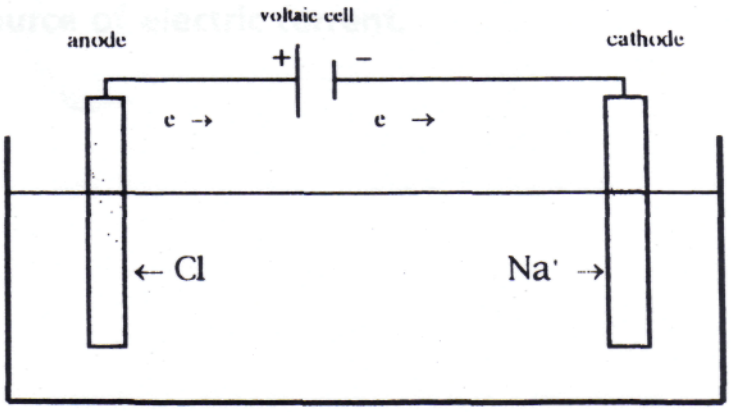

$$NaCl_{(l)} \rightarrow Na^+ + Cl^-$$

Anode: $2Cl^-_{(l)} \rightarrow Cl_{2(g)} + 2e$ Cathode: $2Na^+_{(l)} + 2e \rightarrow 2Na_{(l)}$

Notice that the sign convention for the electrodes in an electrolytic cell is just the opposite of that for a voltaic cell. The cathode in the electrolytic cell is negative because electrons are being forced onto it by the external voltage source. The anode is positive because electrons are being withdrawn by the external source."

"Electrolytic processes have several important applications. This is a means of purifying crude metals such as copper, zinc, cobalt, nickel and aluminum. An additional important application is in electroplating, in which one metal is "plated," or deposited, on another. Electroplating is used to protect objects objects against corrosion and to improve their appearance."

The above notes and excerpts have been obtained from:

Chemistry:The Central Science
by Theodore L. Brown, H. Eugene LeMay, Jr., Bruce E. Bursten-5th ed.
Prentice Hall, Englewood Cliffs, N.J. 1991

The Electrolysis of Water

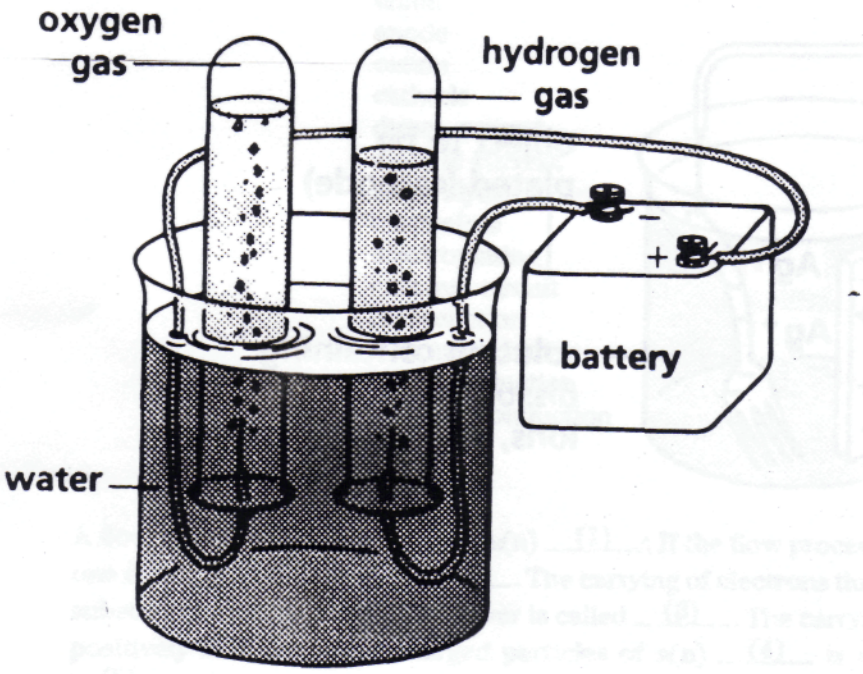

The decomposition of water, an endothermic reaction, takes place only if energy is continuously supplied by a source of electric current.

Electroplating a Fork

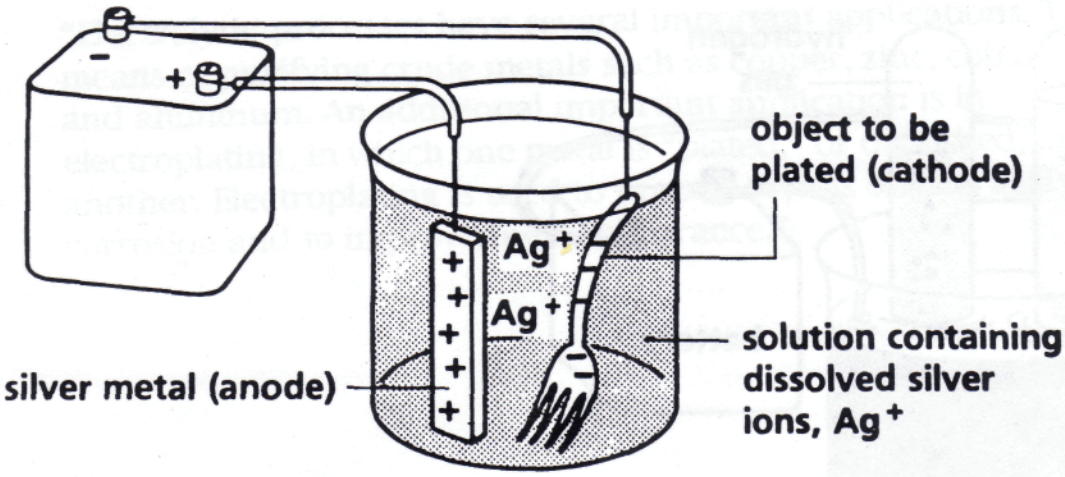

Name _____ Date _____ Class _____

REVIEW ACTIVITY

Text Reference: Section 22-7

Electrolytic Cells

Choose words from the list to fill in the blanks in the paragraphs.

Word List

anion
anode
cation
cathode
direct current
electric current
electrolysis
electrolyte
electroplating
external circuit
half-reaction
internal circuit
ionic conduction
metallic conduction
oxidation
reduction

A flow of electric charge is called a(n) __(1)__. If the flow proceeds in one direction only, it is a(n) __(2)__. The carrying of electrons through substances such as copper and silver is called __(3)__. The carrying of positively and negatively charged particles of a(n) __(4)__ is called __(5)__.

The process by which flowing charges bring about a redox reaction is called __(6)__. In such a process, the battery, wire, and metal strips make up the __(7)__. The electrolyte makes up the __(8)__. The use of this process to coat a material with a layer of metal is called __(9)__. The negative electrode, at which __(10)__ occurs, is called the __(11)__. An ion attracted to this electrode is called a(n) __(12)__. The positive electrode, at which __(13)__ occurs, is called the __(14)__. An ion attracted to this electrode is called a(n) __(15)__. An oxidation or a reduction that is part of a complete oxidation-reduction reaction is called a(n) __(16)__.

1. _____
2. _____
3. _____
4. _____
5. _____
6. _____
7. _____
8. _____
9. _____
10. _____
11. _____
12. _____
13. _____
14. _____
15. _____
16. _____

Name _____ Date _____ Class _____

REVIEW ACTIVITY

Text Reference: Section 22-7

Labelling an Electrolytic Cell

The diagram below represents the electrolysis of a sodium chloride solution (brine).

Match each numbered item in the diagram with the letter of the correct label from the list below.

A. sodium ion	F. positive terminal
B. cathode	G. battery
C. electrolyte	H. chlorine gas
D. hydrogen gas	I. anode
E. chloride ion	J. negative terminal

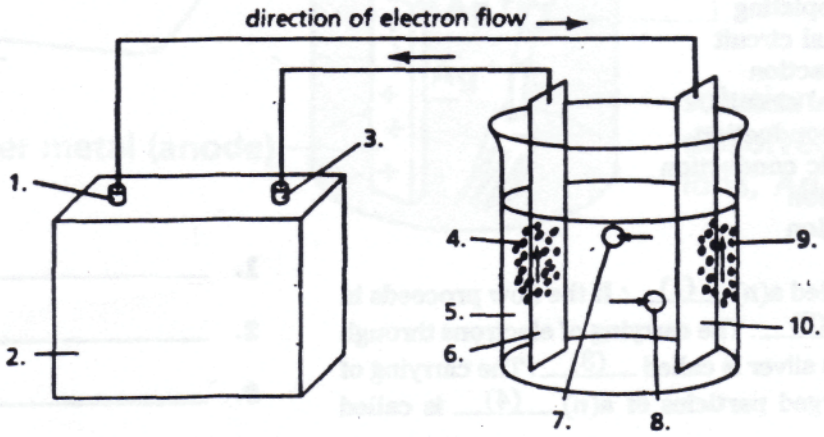

1. _____
2. _____
3. _____
4. _____
5. _____
6. _____
7. _____
8. _____
9. _____
10. _____

11. a. Write the equation for the half-reaction that occurs at the cathode. 11. a. _____

b. Is this an example of oxidation or of reduction? b. _____

12. a. Write the equation for the half-reaction that occurs at the anode. 12. a. _____

b. Is this an example of oxidation or of reduction? b. _____

13. Write the overall ionic equation. 13. _____

14. Write the overall molecular equation. 14. _____